11 Plus for Parents

Spatial Reasoning - Building Blocks

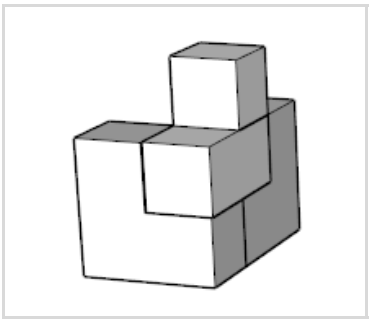

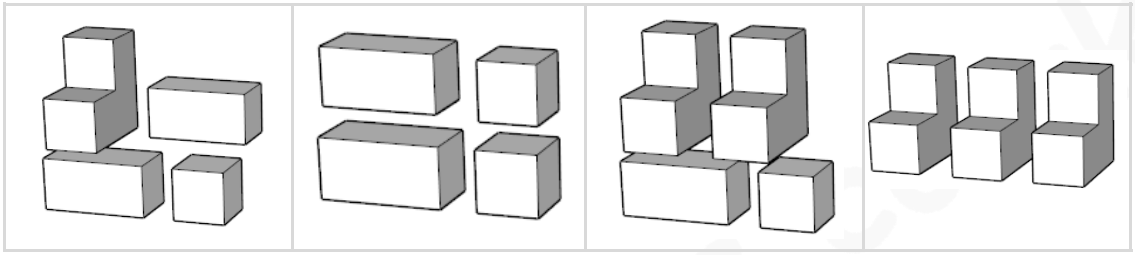

a b c d

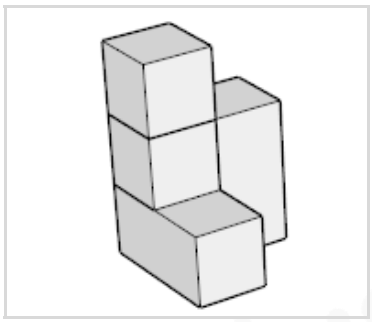

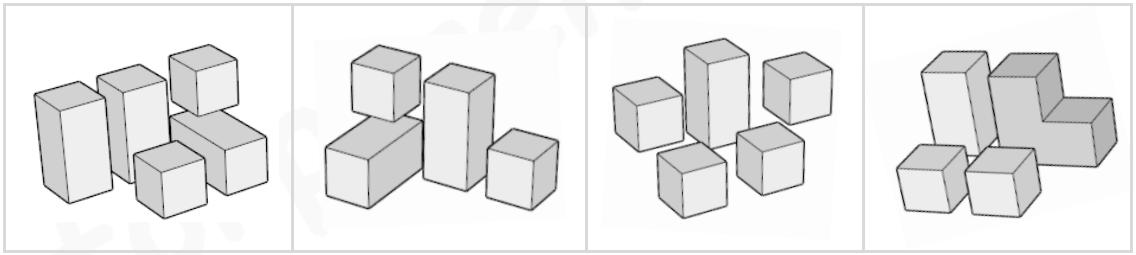

a b c d

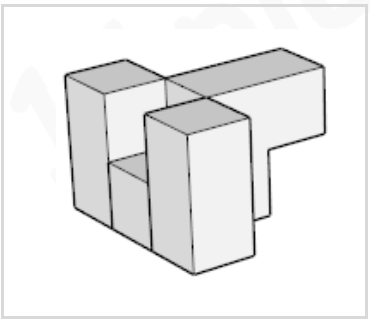

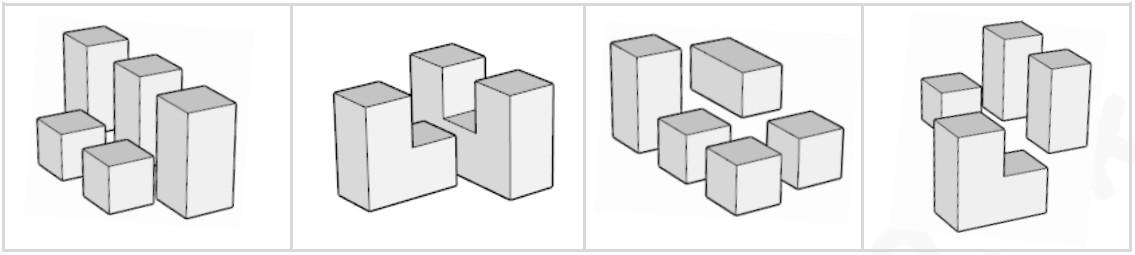

a b c d

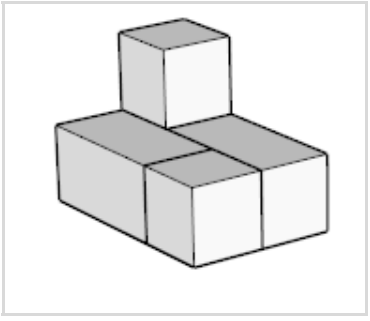

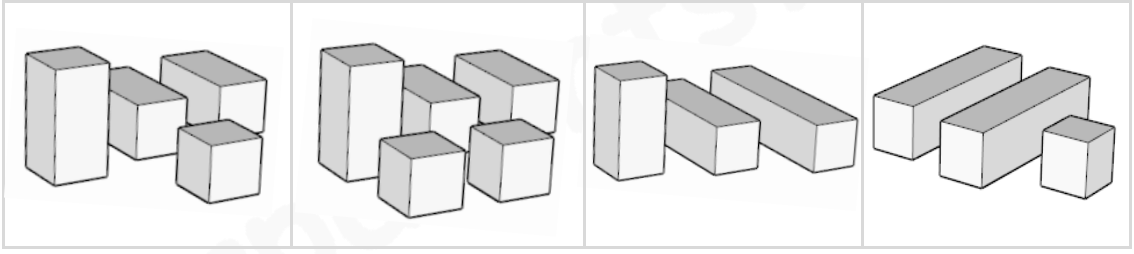

a b c d

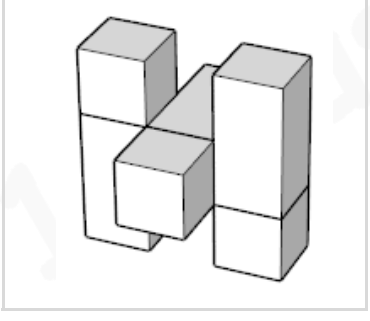

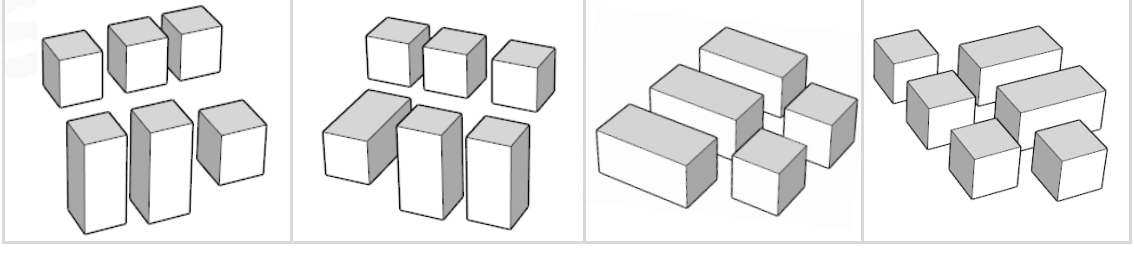

a b c d

"Helping you to get your children through the 11 Plus and into a school of your choice."

11 Plus for Parents

Spatial Reasoning - Building Blocks

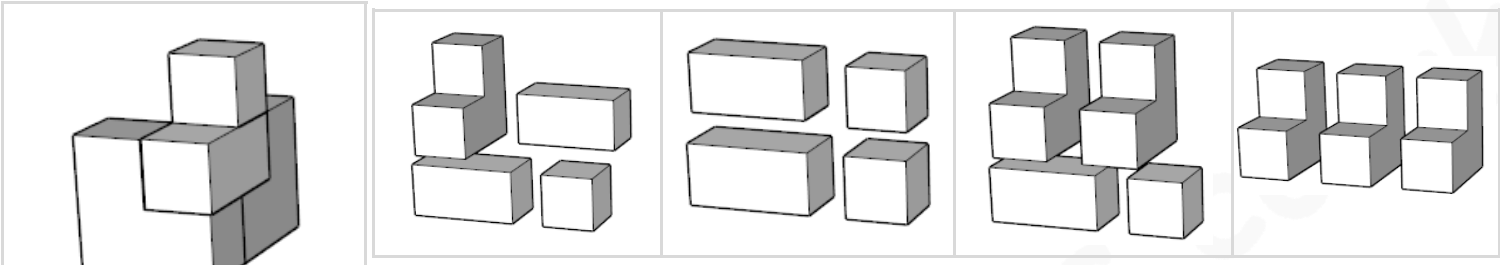

a b c d

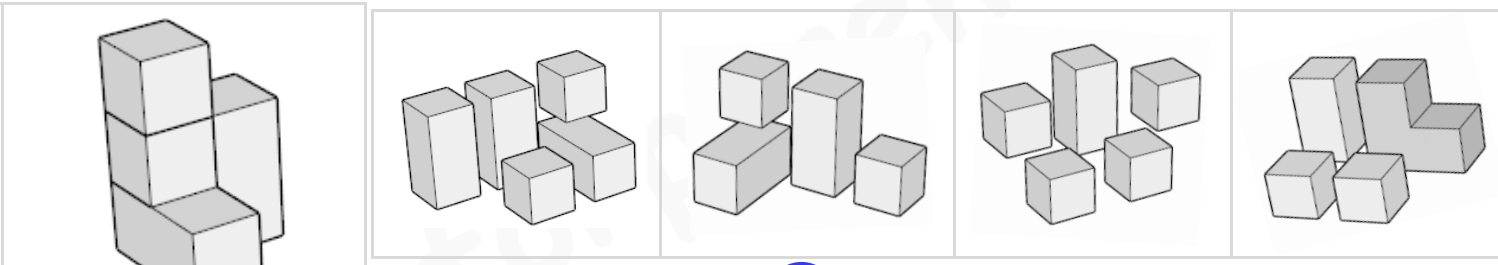

a b c d

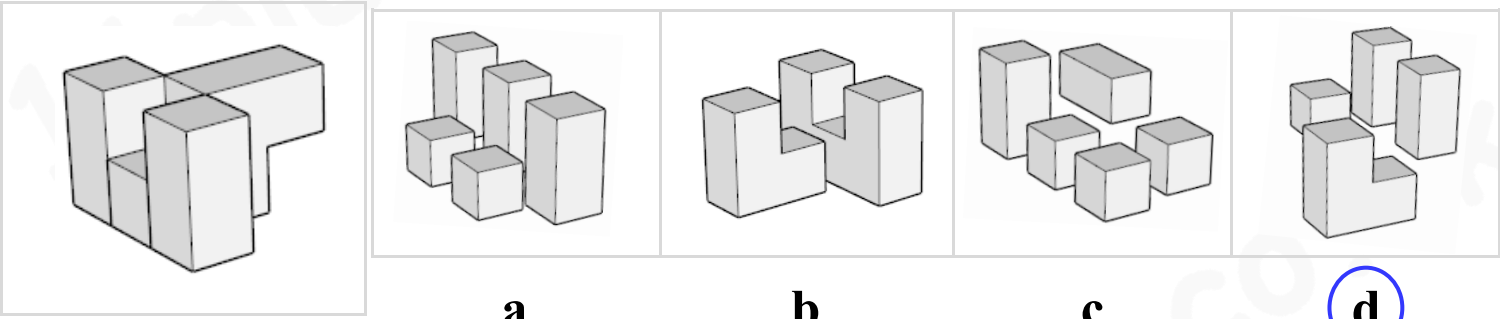

a b c d

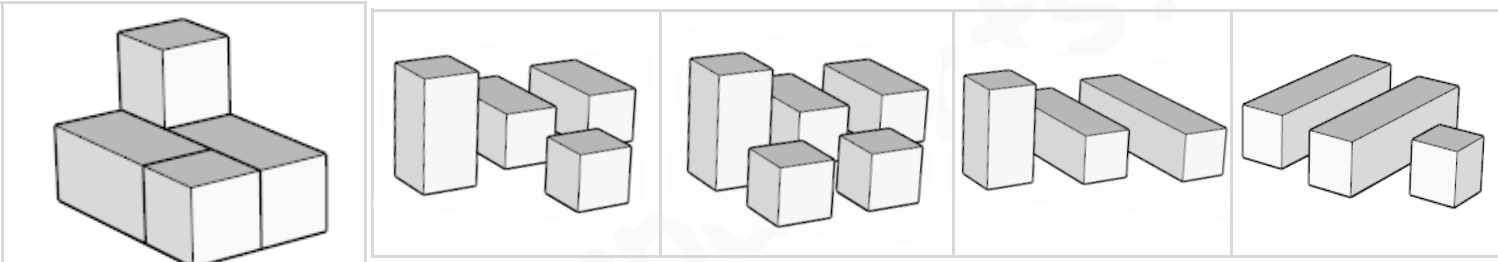

a b c d

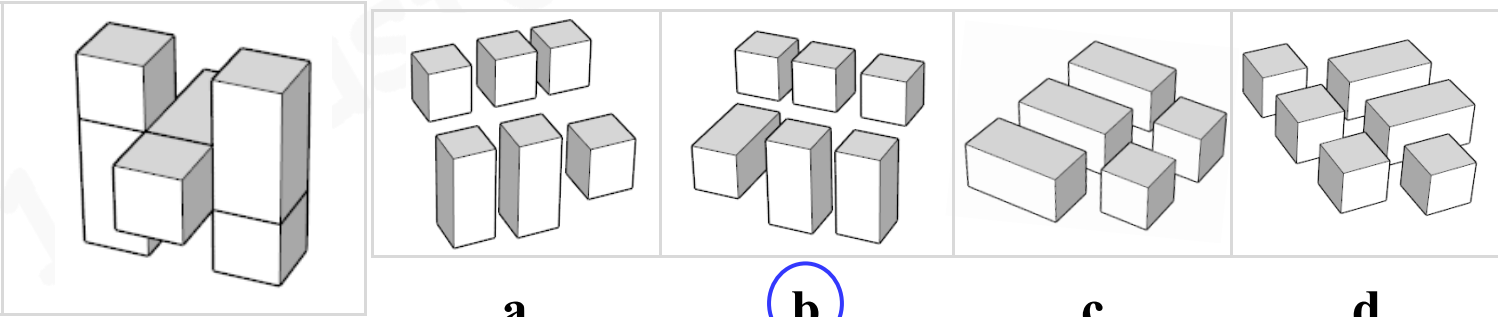

a b c d

"Helping you to get your children through the 11 Plus and into a school of your choice."